Reflectometry on Alcator C-Mod: Status and future upgrades

Nils P. Basse, Y. Lin, J. H. Irby

MIT Plasma Science and Fusion Center

G. J. Kramer, R. Nazikian

Princeton Plasma Physics Laboratory

Outline:

- **C-Mod reflectometry**
- **Physics examples**
- **Upgrades:**
    1. **High frequency**
    2. **Sideband**
    3. **Data acquisition**
- **Phase-contrast imaging**
- **Conclusions**

C-Mod reflectometry

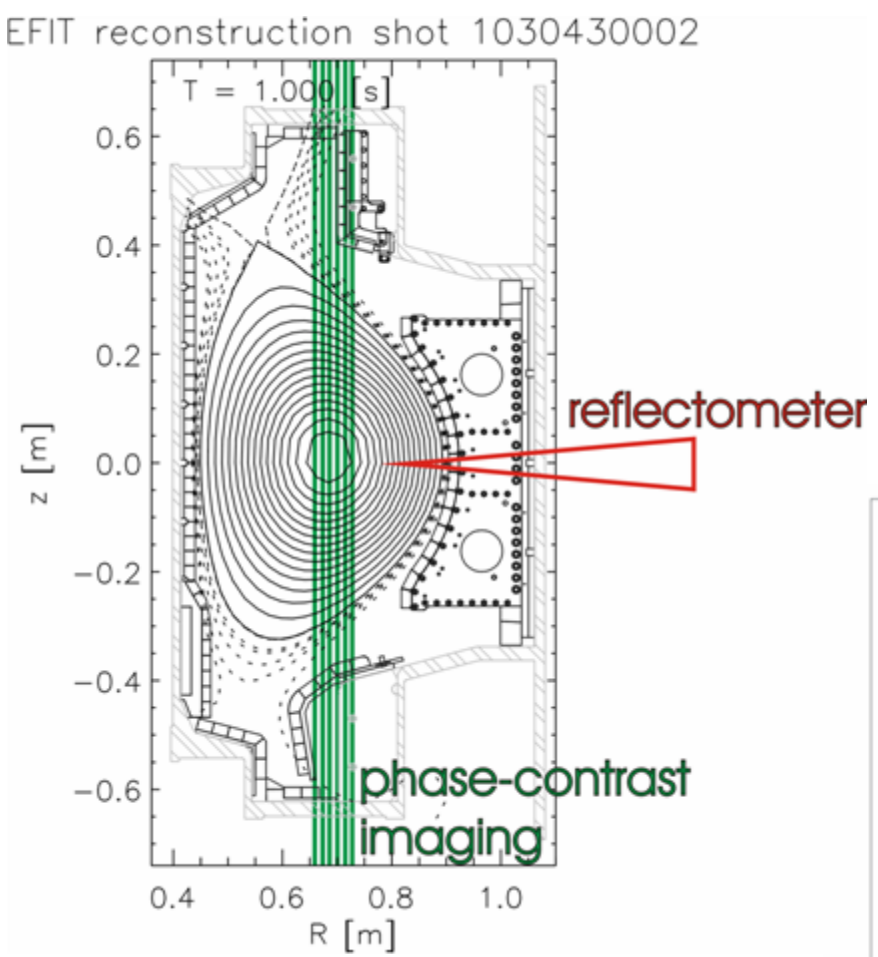

C-Mod operational status: Current campaign began April 2003, ends July 2003.

Reflectometer: O-mode, amplitude modulated. Use group delays for profile and fluctuation measurements.

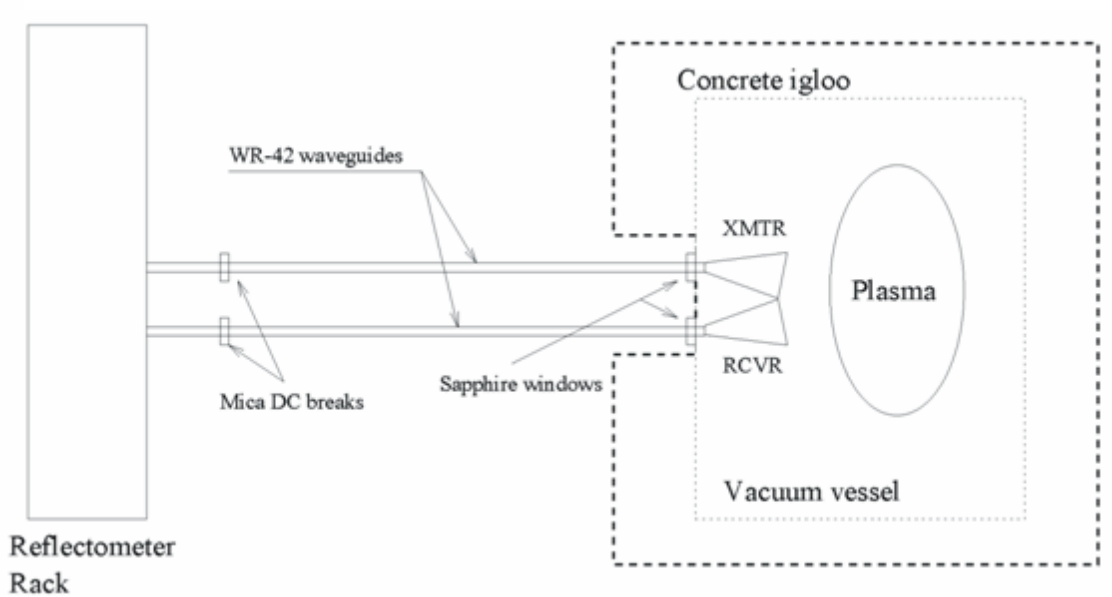

Y. Lin, Ph.D. thesis, MIT (2001)

C-Mod reflectometry

Reflectometer (cont'd):

Frequencies
50, 60, 75, 88 and 110 GHz, corresponding to cutoff densities 0.31, 0.45, 0.69, 0.96 and 1.50 × 10^{20} m^{-3}. This density range is shown as a grey semi-transparent rectangle in the figure of typical L- and H-mode density profiles.

More sensitive to fluctuations near the cutoff layer.

Fluctuations in both the upper and lower sideband are measured in the 88 GHz channel.

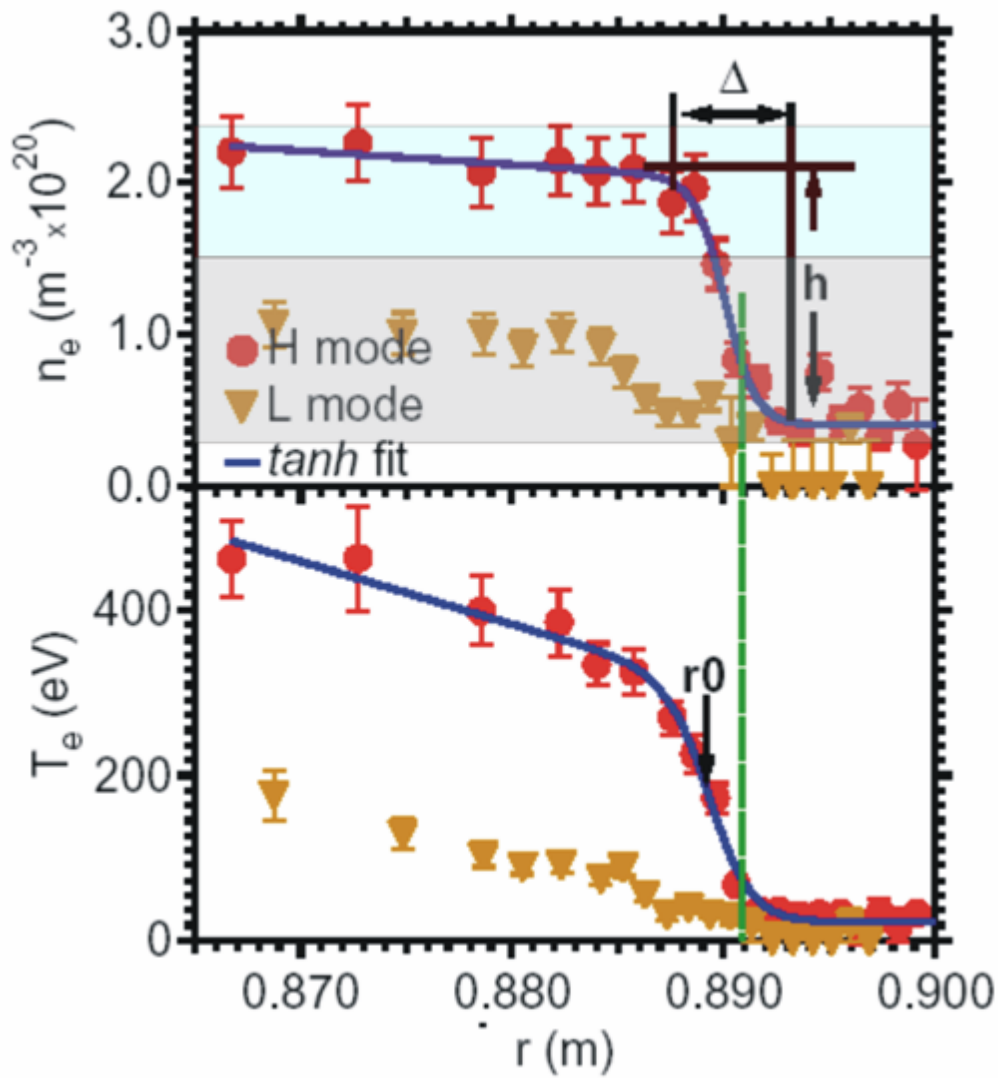

D. A. Mossessian et al., APS Orlando (2002)

C-Mod reflectometry

Y. Lin, Ph.D. thesis, MIT (2001)

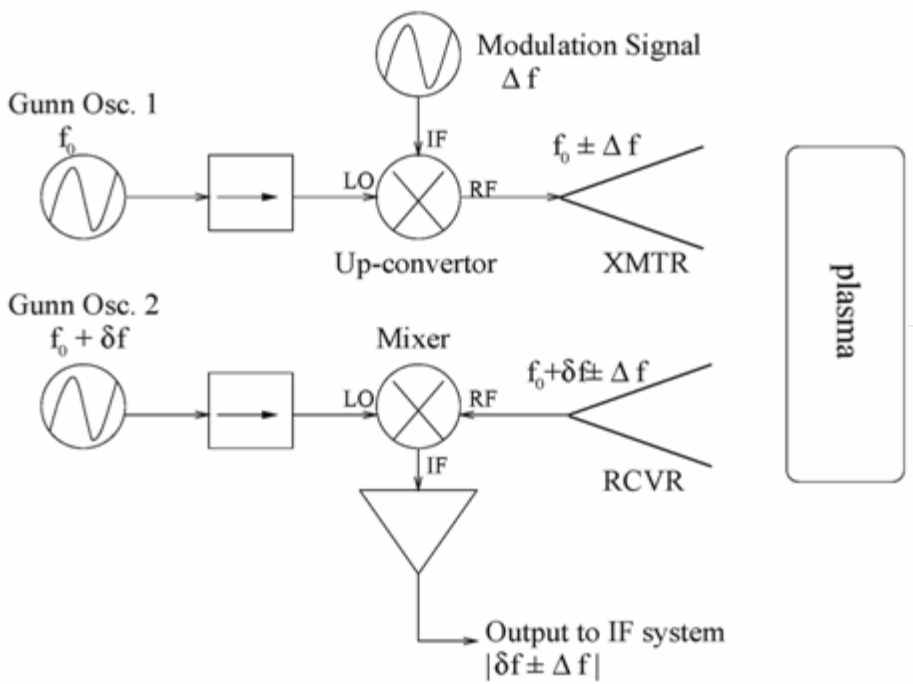

Left: Layout of mm-wave part of reflectometry system measuring density profiles. Group delay obtained by measuring phase difference between upper and lower sideband.

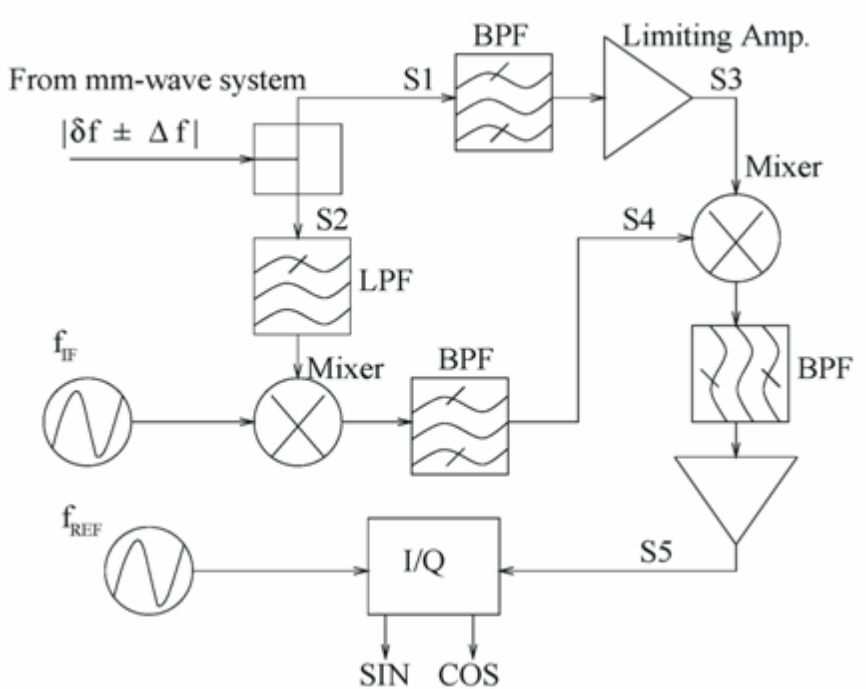

Right: Layout of IF part of reflectometry system. The phase difference between the sidebands is measured by an I/Q detector.

Y. Lin, Ph.D. thesis, MIT (2001)

C-Mod reflectometry

Y. Lin, Ph.D. thesis, MIT (2001)

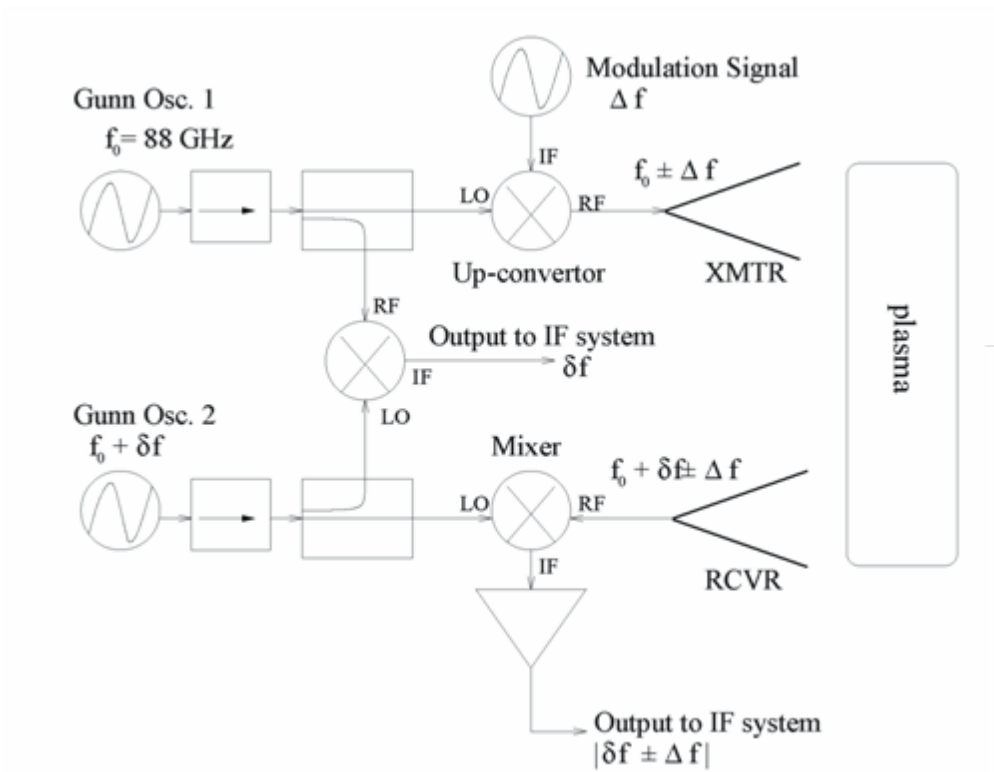

Left: Layout of mm-wave part of the upgraded 88 GHz channel.

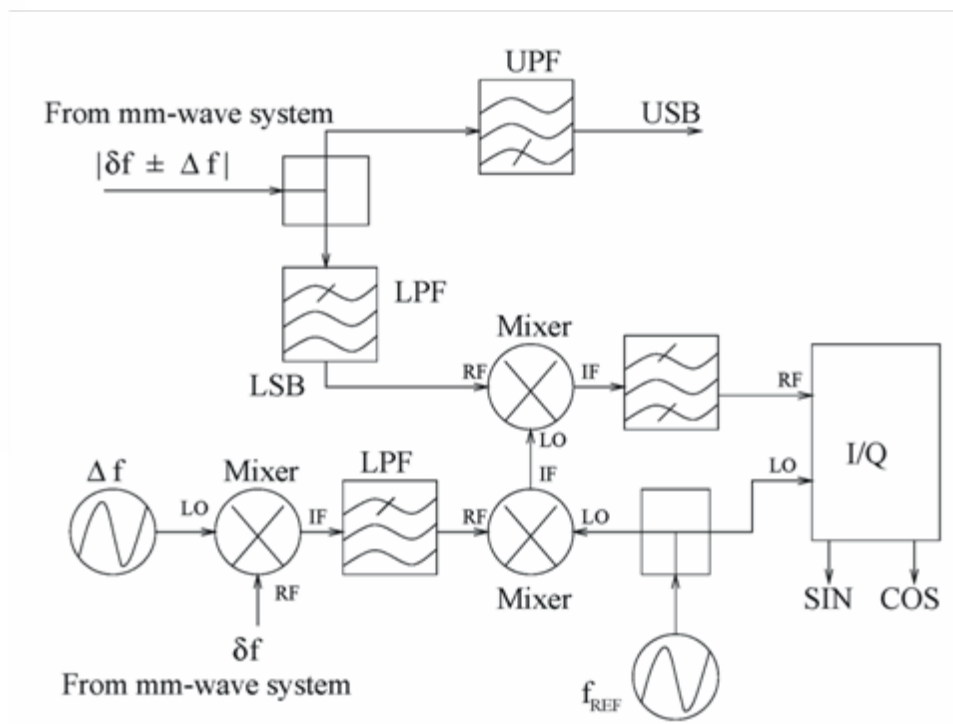

Y. Lin, Ph.D. thesis, MIT (2001)

Right: Layout of IF part of the upgraded 88 GHz channel. The phases of the sidebands are measured independently.

Physics examples

Y. Lin, Ph.D. thesis, MIT (2001)

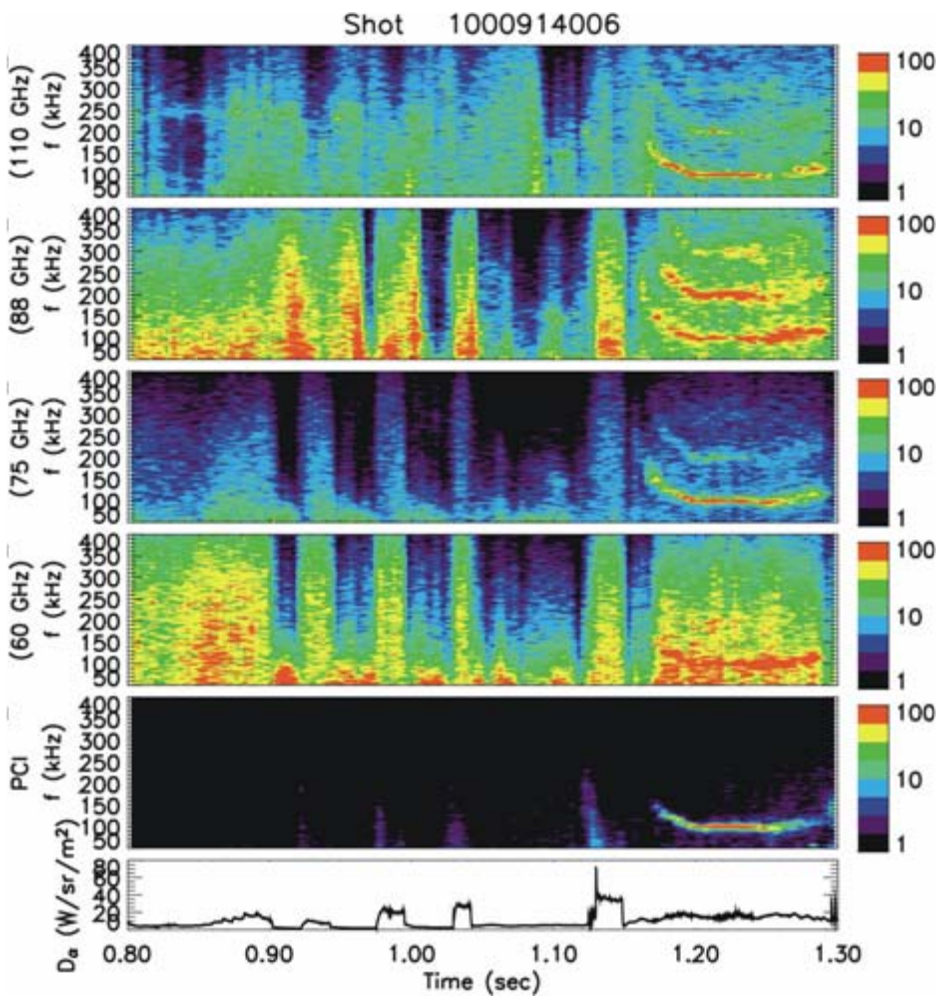

Low density enhanced D-alpha (EDA) H-mode.

Y. Lin, Ph.D. thesis, MIT (2001)

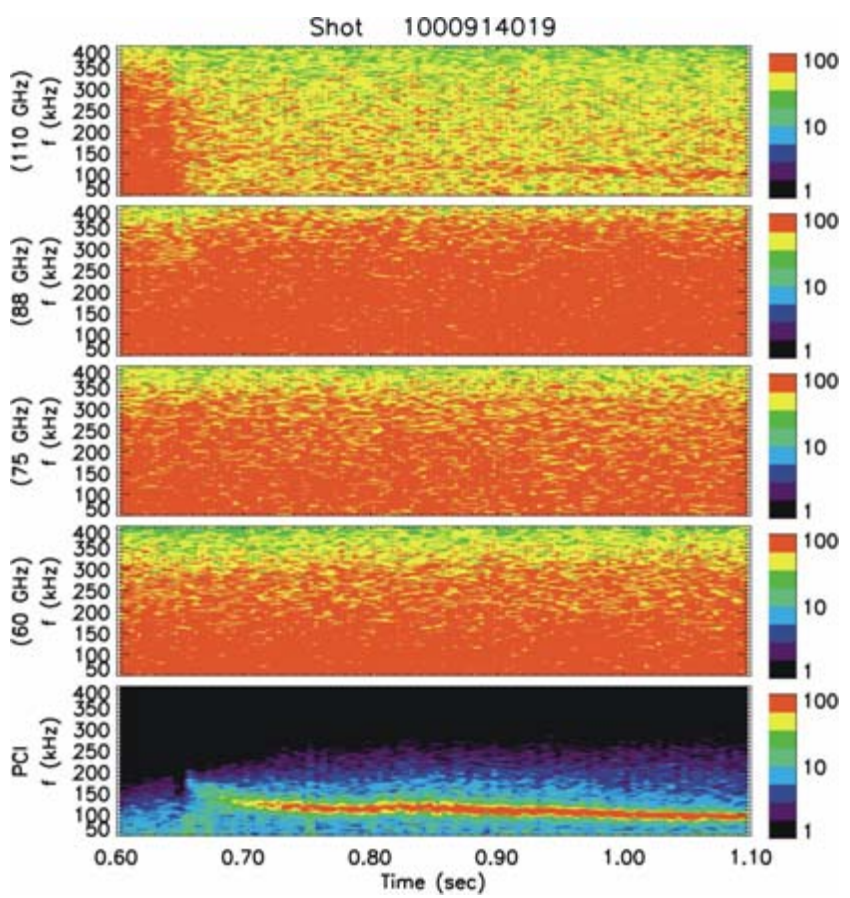

High density EDA H-mode.

Physics examples

Y. Lin et al., APS Quebec City (2000)

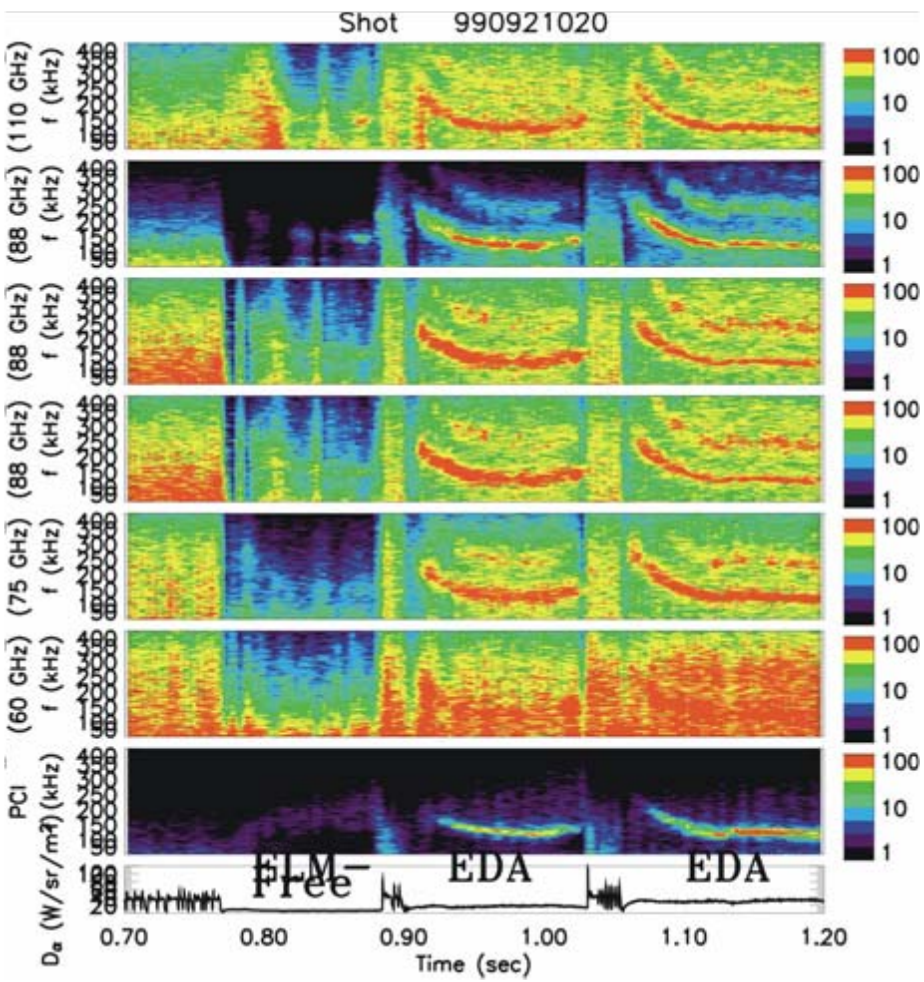

ELM-free and EDA H-modes.

D. A. Mossessian et al.,
Plasma Phys. Control. Fusion 44, 423 (2002)

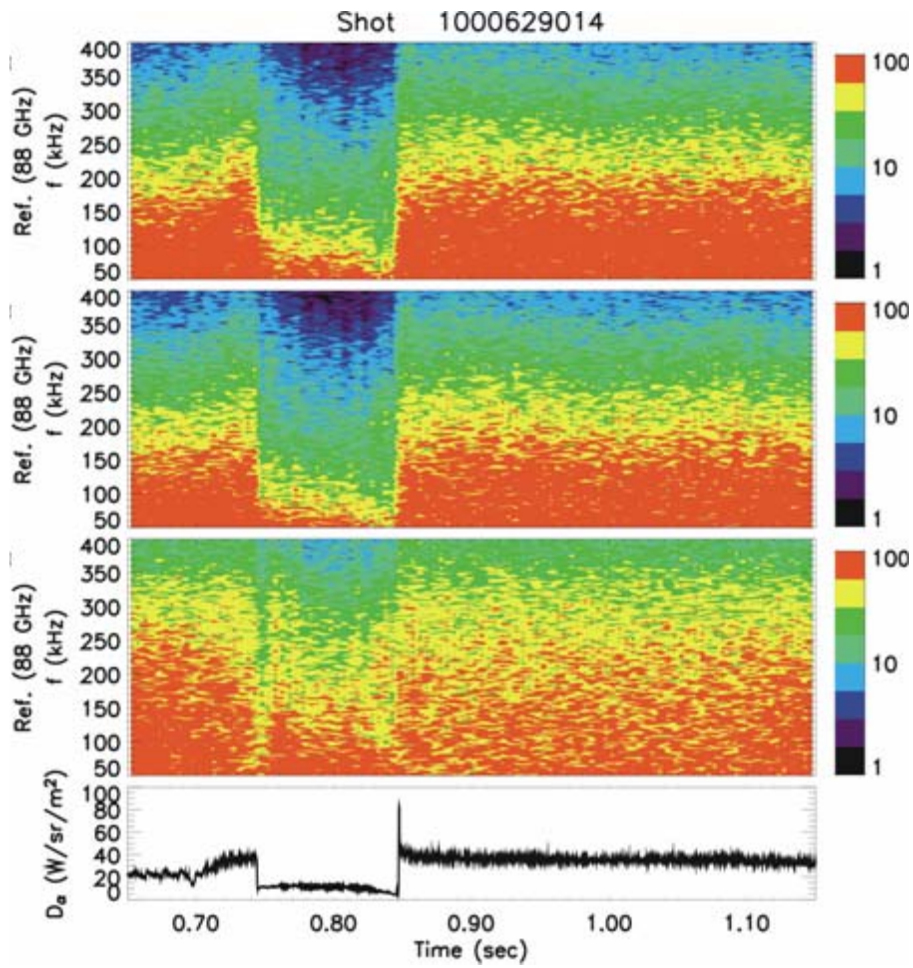

ELM-free H-mode, 88 GHz channels.

Physics examples

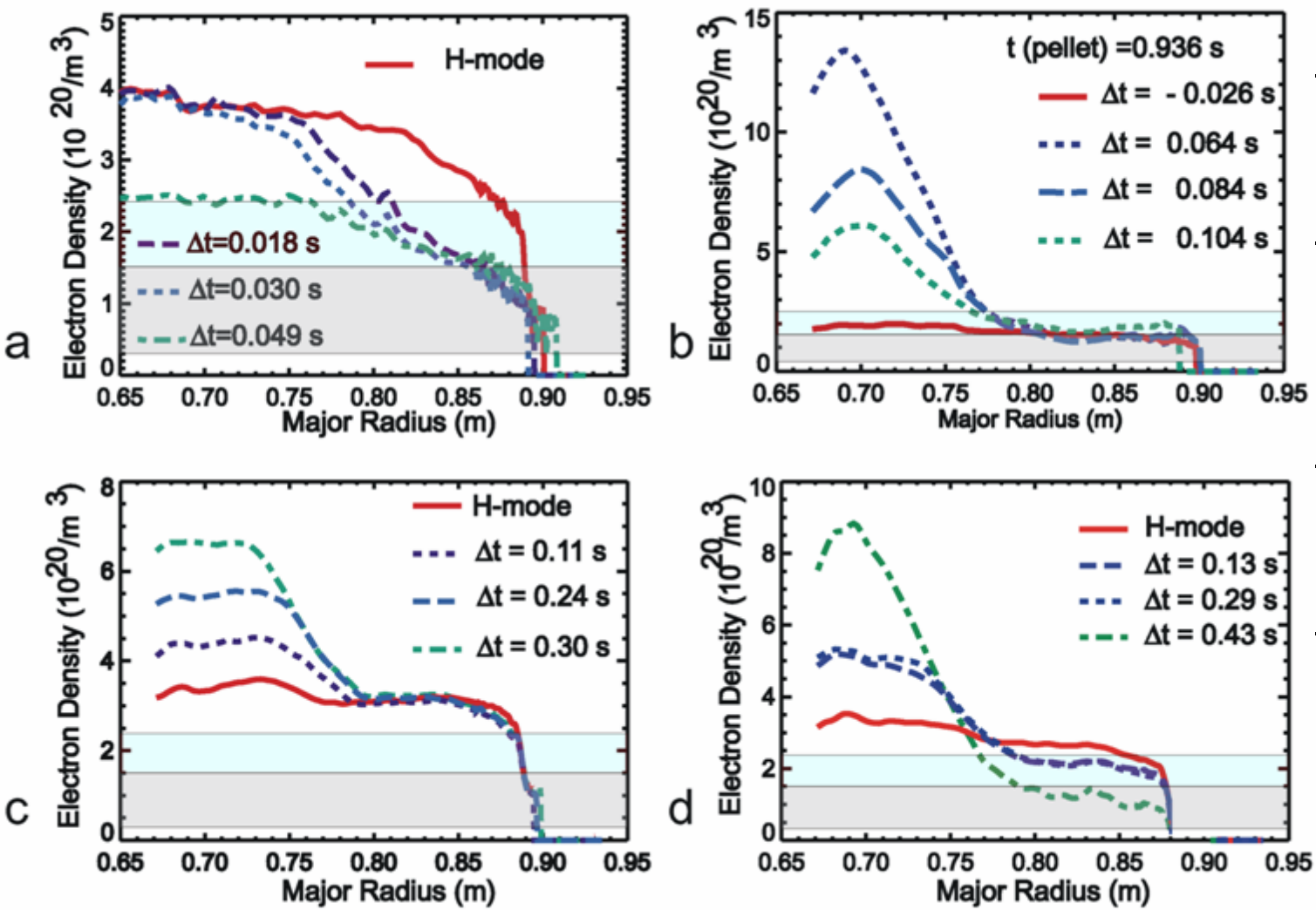

a: Enhanced neutron (EN) mode.
b: Pellet enhanced performance (PEP) mode.
c: Off-axis ICRF internal transport barrier (ITB).
d: Peaked density Ohmic H-mode.

C. L. Fiore et al., Phys. Plasmas 8, 2023 (2001)

High frequency upgrade

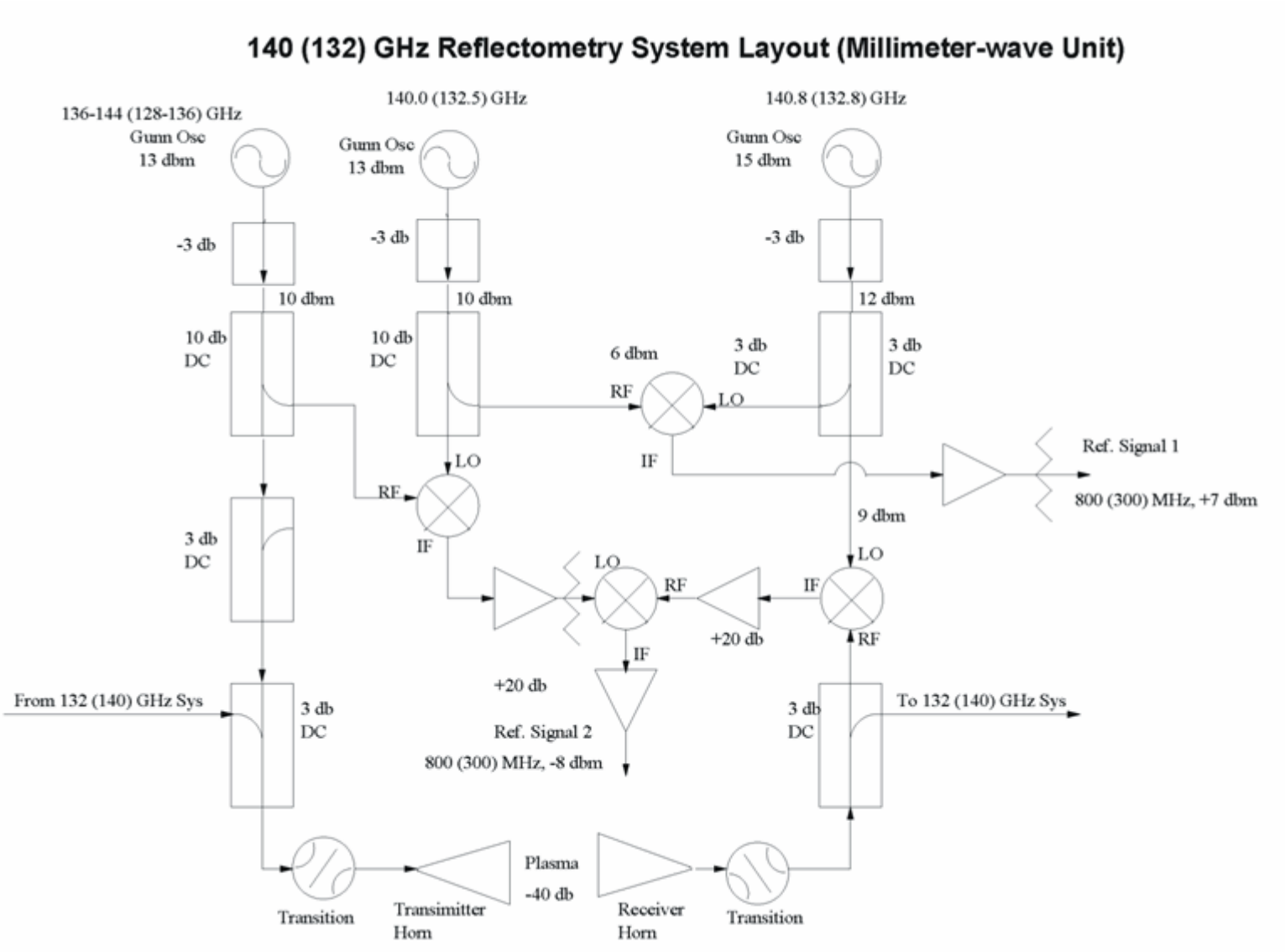

Layout of mm-wave part of 130 and 140 GHz channels.

Y. Lin, Ph.D. thesis, MIT (2001)

High frequency upgrade

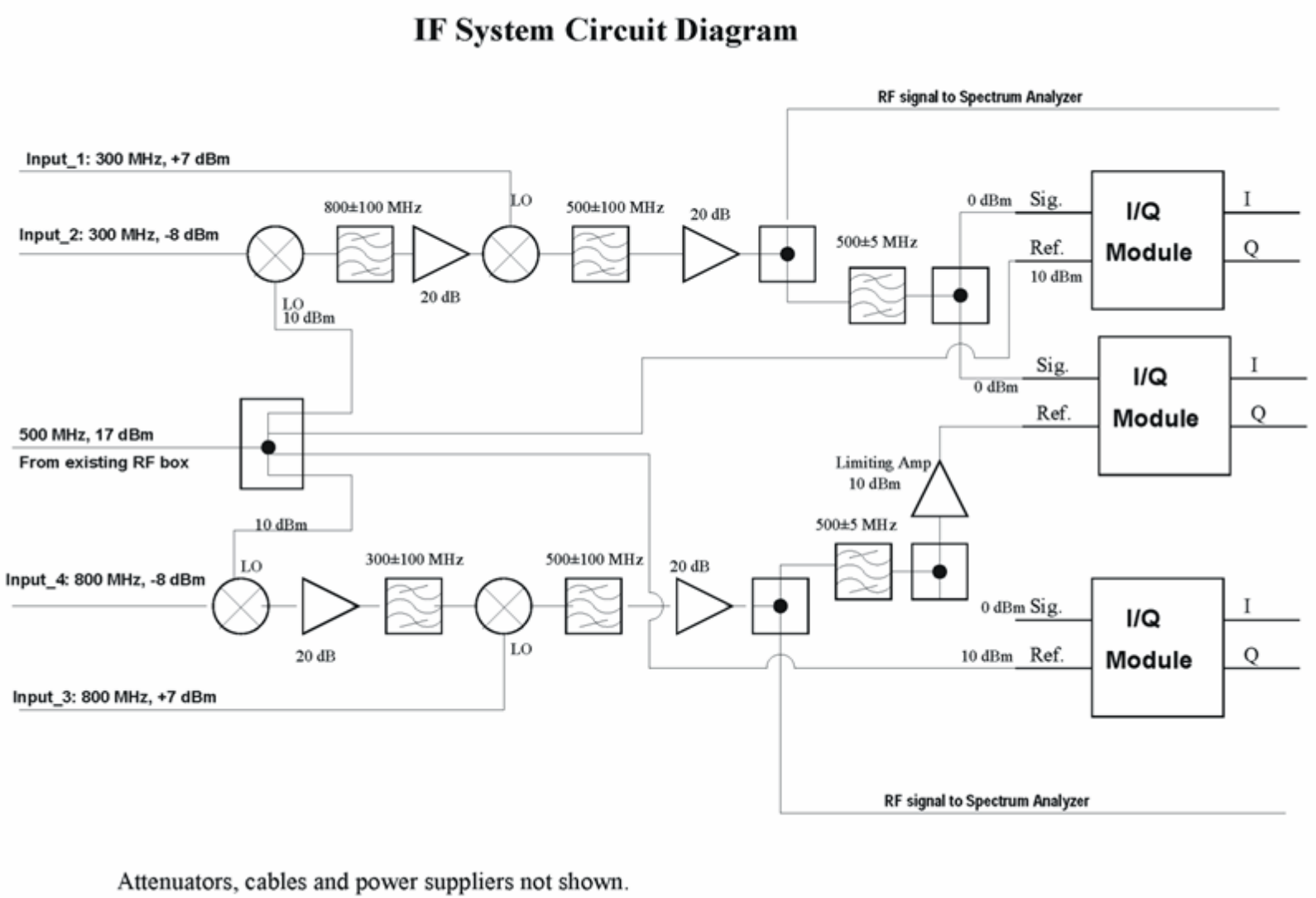

Layout of the IF part of 130 and 140 GHz channels.

Y. Lin, Ph.D. thesis, MIT (2001)

Sideband & data acquisition upgrade

Alcator C-Mod

1. High frequency upgrade: [June 2003]
   Two additional channels, 130 and 140 GHz.
2. Sideband upgrade: [summer 2003]
   Minor modification of mm-wave part of the reflectometry system. Larger change of IF part. It is in principle a simple operation, but will take time to implement.
3. Data acquisition upgrade: [autumn 2003]
   - Currently using CAMAC Aurora 14 digitizers (12 bit, 1 MHz, can acquire 0.5 seconds).
   - CAMAC equipment being discontinued. We will be switching to compact PCI (cPCI).

Phase-contrast imaging

Alcator C-Mod

Parameters:
- Wavenumber along major radius is between 1.5 and 10 cm^{-1}.
- [2, 500] kHz.
- 12 vertical chords passing through the central plasma.
- LN2 cooled detector array (32 elements, 12 used at present).

Status:
- Operational.
- Some parts need to be replaced.

A. Mazurenko, Ph.D. thesis, MIT (2001)

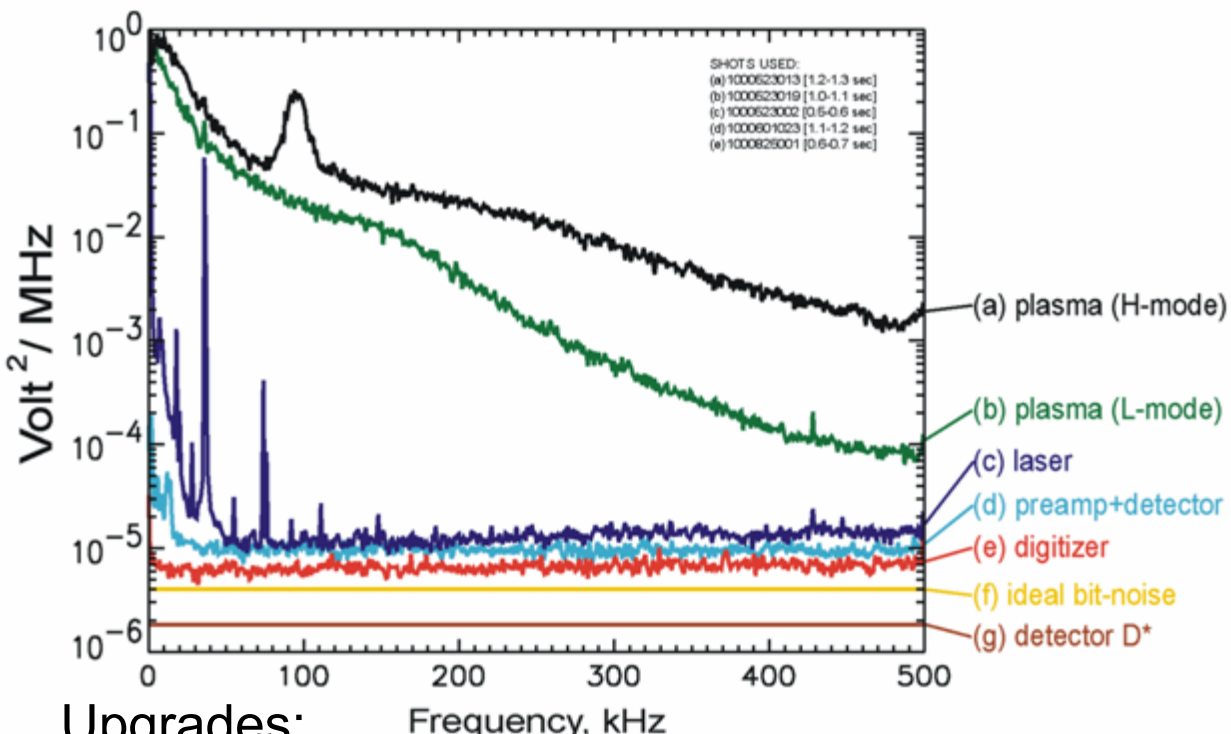

Upgrades:
- Pre-amps (build 32 fast pre-amps).
- Data acquisition (fast cPCI boards have been ordered).
- Spatial localization.
- Large wavenumber.

Conclusions

A 5 channel O-mode amplitude modulated reflectometer is installed on the Alcator C-Mod tokamak. Measured group delays are used for density profile and fluctuation studies. The 88 GHz channel has been upgraded to detect the lower and upper sidebands separately. The following upgrades are to be made:

<u>Reflectometry:</u>

1. Add two high frequency (130, 140 GHz) channels to the system in order to study ITB fluctuations.
2. Convert existing channels to the 88 GHz setup.
3. Upgrade data acquisition hardware.

<u>Phase-contrast imaging:</u>

1. Upgrade to more channels, higher frequency operation.
2. Implement localization scheme, convert to large wavenumber measurements.
3. Correlate PCI and reflectometry measurements.